Fernco Inc.	1002-88	DESCRIPTION: CONNECTS 8 IN. CLAY TO 8 IN. CI/PL

(317) 346-4110
www.drainagesolutionsinc.com
DRAINAGE SOLUTIONS, INC

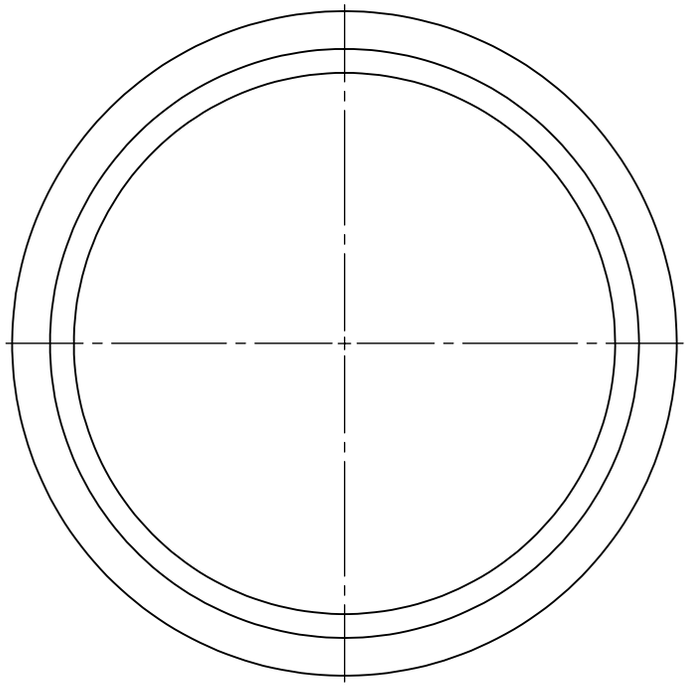

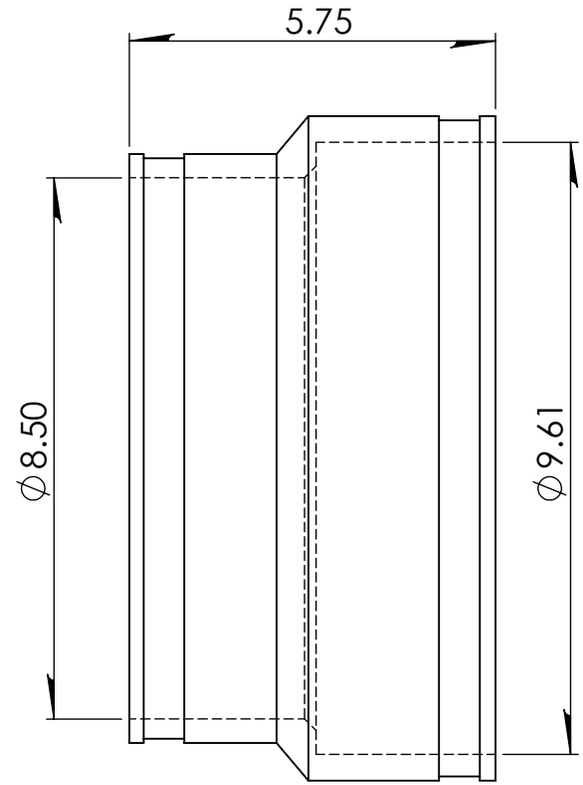

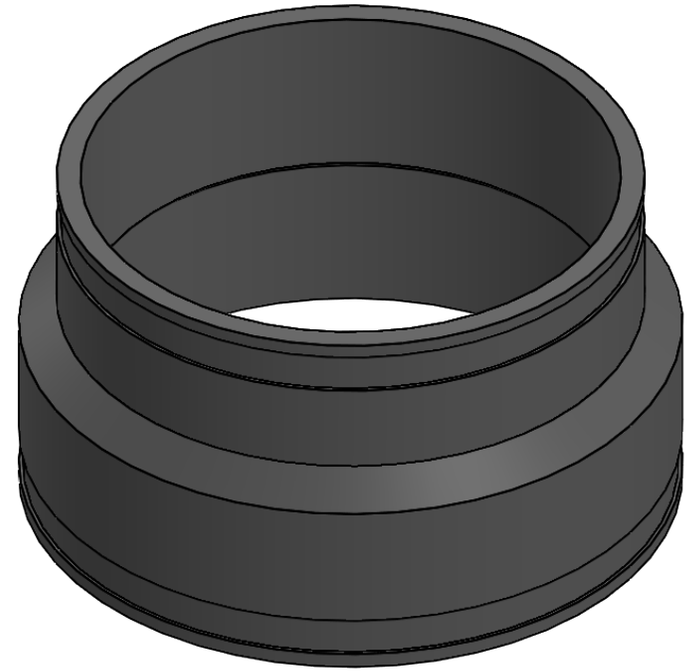

NOTE:

PROPRIETARY AND CONFIDENTIAL
THE INFORMATION CONTAINED IN THIS DRAWING IS THE SOLE PROPERTY OF FERNCO, INC. ANY REPRODUCTION IN PART OR AS A WHOLE WITHOUT THE WRITTEN PERMISSION OF FERNCO, INC. IS PROHIBITED.

TOLERANCES:
FRACTIONAL ± 1/4"
.XX= ±.06
ANG.= ±3°
UNLESS OTHERWISE SPECIFIED

MATERIAL	PVC	CLAMPS USED	300 SERIES STAINLESS
PART WEIGHT		INSTALLATION TORQUE	60 IN · LBS
BOX QUANTITY		MIN/MAX TEMP.	-30/140 °F
PRESSURE TESTED		ASTM	C1173 / D5926

UNITS: INCHES	SIZE: A	AUTHOR: ELI MILLER		SCALE: NOT TO SCALE
3RD ANGLE PROJECTION DO NOT SCALE DRAWING		CHECKER:	DATE: 9/17/2018	SHEET 1 OF 1